URBI Line
WWW.URBI.COM.ES

Dimension

L	*	W	*	H	
278	*	127	*	83.5(2U)	mm
10.9	*	5	*	3.29(2U)	inch

Parallel PFC c UL us TÜV CB CE

Features

- Universal AC input / Full range
- Built-in active PFC function
- High efficiency up to 91%
- Forced air cooling by built-in DC fan
- Output voltage programmable
- Active current sharing up to 6000W (3+1)
- Built-in remote ON-OFF control / remote sense / auxiliary power / power OK signal
- Protections: Short circuit / Overload / Over voltage / Over temperature
- Optional conformal coating
- 5 years warranty

Certificates

- Safety: UL/EN/IEC 60950-1
- EMC: EN 55022 / 55024

Applications

- Factory control or automation apparatus
- Test and measurement instrument
- Laser related machine
- Burn-in facility
- Digital broadcasting
- RF application

Description

RSP-1500 is a 1.5KW single output enclosed type AC/DC power supply. This series operates for 90~264VAC input voltage and offers the models with the DC output mostly demanded from the industry. Each model is cooled by the built-in fan with fan speed control, working for the temperature up to 70℃. Moreover, RSP-1500 provides vast design flexibility by equipping various built-in functions such as the output programming, active current sharing, remote ON-OFF control, auxiliary power, etc.

Model Encoding / Order Information

RSP - 1500 - 48

- 48 — Output voltage (5V/12V/15V/24V/27V/48V)
- 1500 — Output wattage
- RSP — Series name

SPECIFICATION

MODEL		RSP-1500-5	RSP-1500-12	RSP-1500-15	RSP-1500-24	RSP-1500-27	RSP-1500-48
OUTPUT	DC VOLTAGE	5V	12V	15V	24V	27V	48V
	RATED CURRENT	240A	125A	100A	63A	56A	32A
	CURRENT RANGE	0 ~ 240A	0 ~ 125A	0 ~ 100A	0 ~ 63A	0 ~ 56A	0 ~ 32A
	RATED POWER	1200W	1500W	1500W	1512W	1512W	1536W
	RIPPLE & NOISE (max.) Note.2	150mVp-p	150mVp-p	150mVp-p	150mVp-p	150mVp-p	200mVp-p
	VOLTAGE ADJ. RANGE	4.5 ~ 5.5V	10 ~ 13.5V	13.5 ~ 16.5V	20 ~ 26.4V	24 ~ 30V	43 ~ 56V
	VOLTAGE TOLERANCE Note.3	±2.0%	±1.0%	±1.0%	±1.0%	±1.0%	±1.0%
	LINE REGULATION	±0.5%	±0.5%	±0.5%	±0.5%	±0.5%	±0.5%
	LOAD REGULATION	±2.0%	±0.5%	±0.5%	±0.5%	±0.5%	±0.5%
	SETUP, RISE TIME	1500ms, 100ms at full load					
	HOLD UP TIME (Typ.)	10ms at full load		14ms at full load		16ms at full load	
INPUT	VOLTAGE RANGE	90 ~ 264VAC 127 ~ 370VDC					
	FREQUENCY RANGE	47 ~ 63Hz					
	POWER FACTOR (Typ.)	0.95/230VAC 0.98/115VAC at full load					
	EFFICIENCY (Typ.)	80%	87%	87%	90%	90%	91%
	AC CURRENT (Typ.)	17A/115VAC 8A/230VAC					
	INRUSH CURRENT (Typ.)	30A/115VAC 60A/230VAC					
	LEAKAGE CURRENT	<2.0mA / 240VAC					
PROTECTION	OVERLOAD Note.5	105 ~135% rated output power					
		Protection type : Constant current limiting unit will shut down o/p voltage after 5sec. Re-power on to recover					
	OVER VOLTAGE	5.75 ~ 6.75V	13.8 ~ 16.8V	17 ~ 20.5V	27.6 ~ 32.4V	31 ~ 36.5V	57.6 ~ 67.2V
		Protection type : Shut down o/p voltage, re-power on to recover					
	OVER TEMPERATURE	Shut down o/p voltage, recovers automatically after temperature goes down					
FUNCTION	OUTPUT VOLTAGE PROGRAMMABLE(PV)	Adjustment of output voltage is allowable to 70 ~ 100% of nominal output voltage. Please refer to the Function Manual.					
	CURRENT SHARING	Up to 6000W or (3+1) units. Please refer to the Function Manual.					
	AUXILIARY POWER	12V@0.1A(Only for Remote ON-OFF control)					
	REMOTE ON-OFF CONTROL	Please see the Function Manual.					
	REMOTE SENSE	Compensate voltage drop on the load wiring up to 0.3V. Please refer to the Function Manual.					
	ALARM SIGNAL OUTPUT	Power OK signal. Please see the Function Manual.					
ENVIRONMENT	WORKING TEMP.	-20 ~ +70℃ (Refer to "Derating Curve")					
	WORKING HUMIDITY	20 ~ 90% RH non-condensing					
	STORAGE TEMP., HUMIDITY	-40 ~ +85℃, 10 ~ 95% RH					
	TEMP. COEFFICIENT	±0.05%/℃ (0 ~ 50℃)					
	VIBRATION	10 ~ 500Hz, 2G 10min./1cycle, 60min. each along X, Y, Z axes					
SAFETY & EMC (Note 4)	SAFETY STANDARDS	UL60950-1, TUV EN60950-1 approved					
	WITHSTAND VOLTAGE	I/P-O/P:3KVAC I/P-FG:2KVAC O/P-FG:0.5KVAC					
	ISOLATION RESISTANCE	I/P-O/P, I/P-FG, O/P-FG:100M Ohms / 500VDC / 25℃/ 70% RH					
	EMC EMISSION	**Parameter**		**Standard**		**Test Level / Note**	
		Conducted		EN55022 (CISPR22) / EN55011 (CISPR11)		Class A	
		Radiated		EN55022 (CISPR22) / EN55011 (CISPR11)		Class A	
		Harmonic Current		EN61000-3-2		-----	
		Voltage Flicker		EN61000-3-3		-----	
	EMC IMMUNITY	EN55024 , EN61204-3, EN61000-6-2					
		Parameter		**Standard**		**Test Level / Note**	
		ESD		EN61000-4-2		Level 3, 8KV air ; Level 2, 4KV contact	
		Radiated		EN61000-4-3		Level 3	
		EFT / Burst		EN61000-4-4		Level 3	
		Surge		EN61000-4-5		Level 4, 2KV/Line-Line 4KV/Line-Earth	
		Conducted		EN61000-4-6		Level 3	
		Magnetic Field		EN61000-4-8		Level 4	
		Voltage Dips and Interruptions		EN61000-4-11		>95% dip 0.5 periods, 30% dip 25 periods, >95% interruptions 250 periods	
OTHERS	MTBF	265.3K hrs min. Telcordia SR-332 (Bellcore) ; 90.3K hrs min. MIL-HDBK-217F (25℃)7F (25℃)					
	DIMENSION	278*127*83.5mm (L*W*H)					
	PACKING	3.0Kg; 4pcs/13Kg/1.19CUFT					

NOTE

1. All parameters NOT specially mentioned are measured at 230VAC input, rated load and 25℃ of ambient temperature.
2. Ripple & noise are measured at 20MHz of bandwidth by using a 12" twisted pair-wire terminated with a 0.1uf & 47uf parallel capacitor.
3. Tolerance : includes set up tolerance, line regulation and load regulation.
4. The power supply is considered a component which will be installed into a final equipment. All the EMC tests are been executed by mounting the unit on a 720mm*360mm metal plate with 1mm of thickness. The final equipment must be re-confirmed that it still meets EMC directives. For guidance on how to perform these EMC tests, please refer to "EMI testing of component power supplies." (as available on http://www.meanwell.com)
5. Derating may be needed under low input voltages. Please check the derating curve for more details.

■ Block Diagram

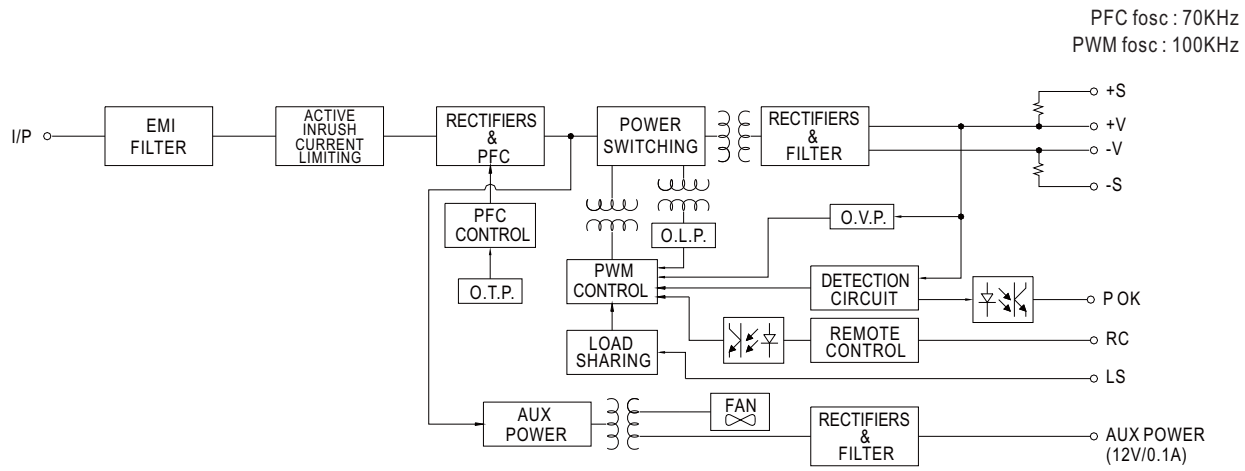

■ Static Characteristics

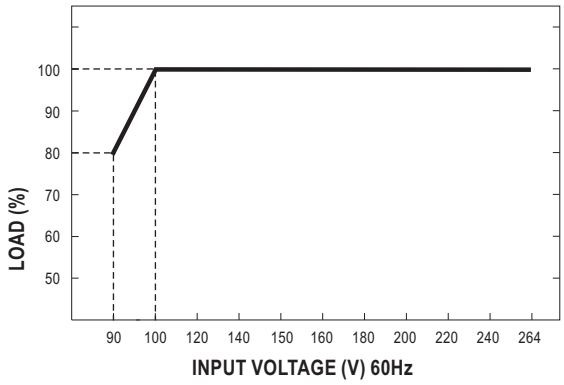

INPUT \ MODEL	5V	12V	15V
100~264VAC	1200W 240A	1500W 125A	1500W 100A
90VAC	960W 192A	1200W 100A	1200W 80A
INPUT \ MODEL	**24V**	**27V**	**48V**
100~264VAC	1512W 63A	1512W 56A	1536W 32A
90VAC	1209.6W 50.4A	1209.6W 44.8A	1228.8W 25.6A

■ Derating Curve

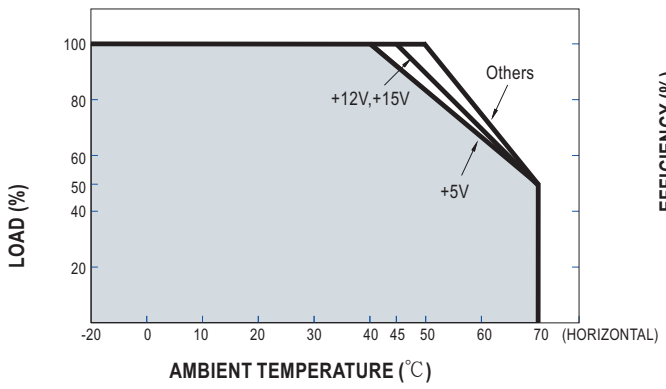

■ Efficiency vs Load (48V Model)

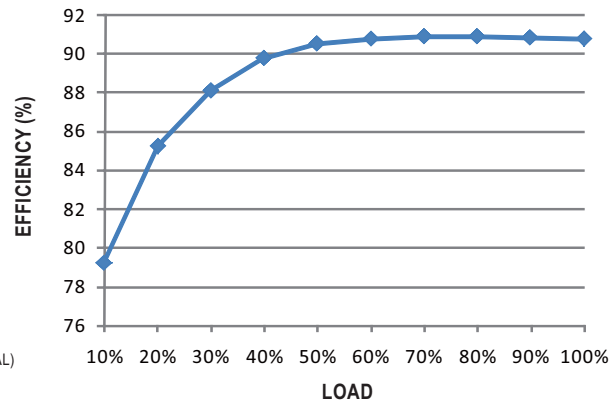

◎ The curve above is measured at 230VAC.

■ Function Manual

1. Remote Sense

※ The Remote Sense compensates voltage drop on the load wiring up to 0.3V

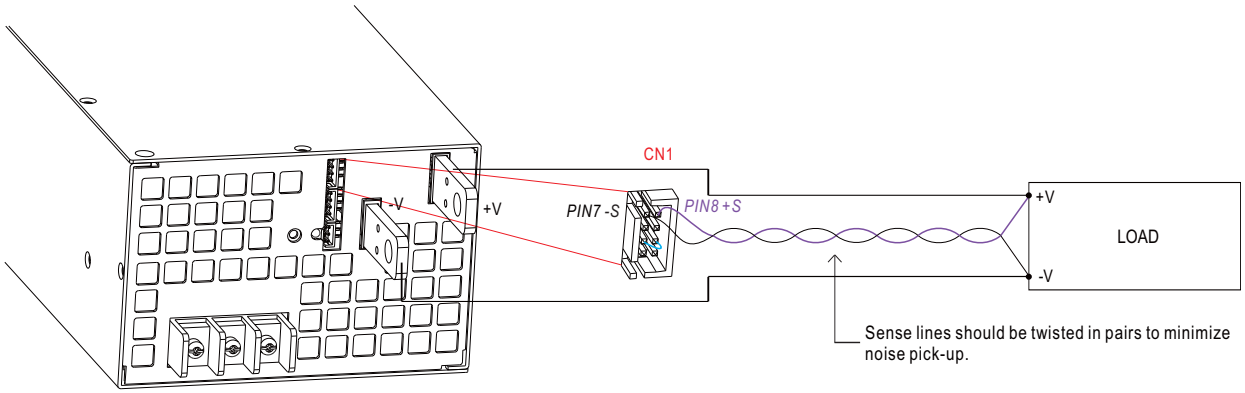

2. Output Voltage Programming (or, PV / remote voltage programming / remote adjust / margin programming / dynamic voltage trim)

※ In addition to the adjustment via the built-in potentiometer, the output voltage can be trimmed to 70~100%(Typ.) of the nominal voltage by applying EXTERNAL RESISTANCE

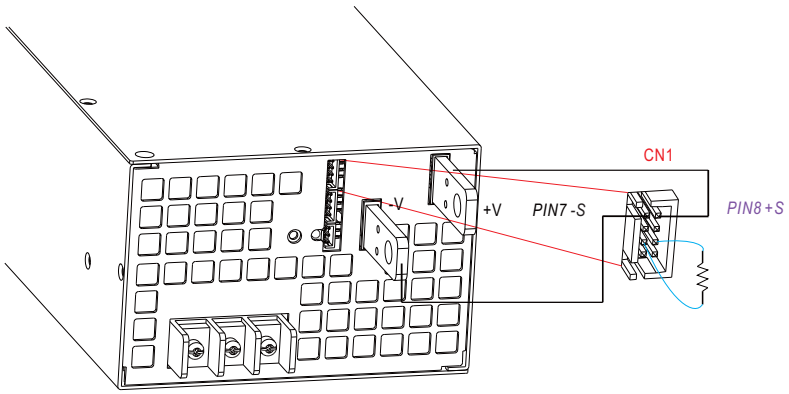

◎ Connect an external resistor between *TRIM(pin4)* & *-S(pin3 or pin4 or pin5)* on CN1 or CN2, and +S & +V, -S & -V also need to be connected.

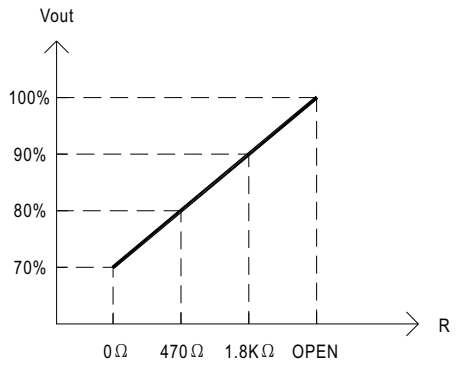

Fig. 2.2 External Resistance (Typical)

3.Remote ON-OFF

※ Remote ON-OFF is activated by the configuration with respect to CN1,CN2 and CN3 as shown in the following diagram.

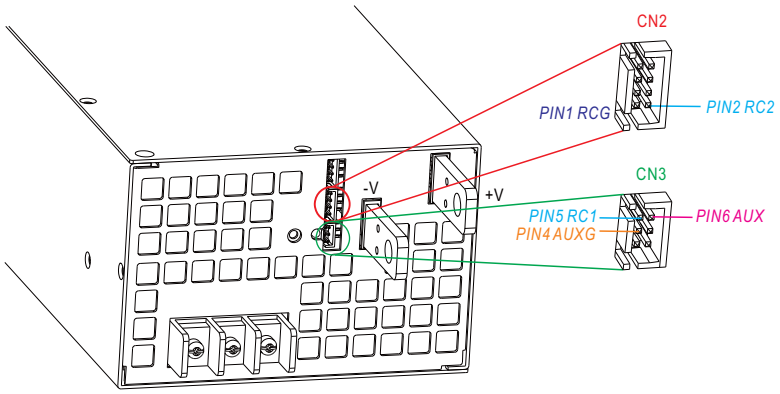

Example 3.2(A): Using external voltage source

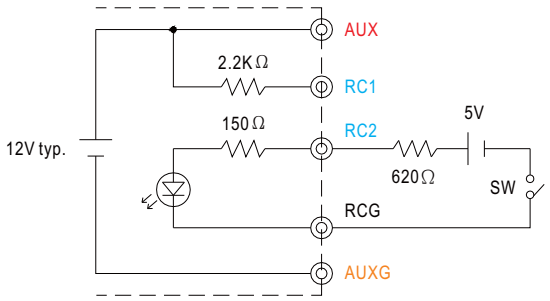

Example 3.2(B): Using internal 12V auxiliary output

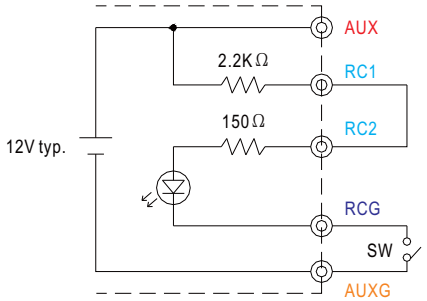

Example 3.2(C): Using internal 12V auxiliary output

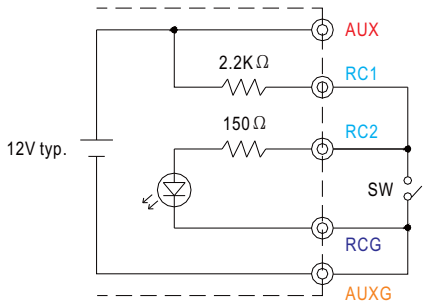

◎ Connection Method

		Fig. 3.2(A)	Fig. 3.2(B)	Fig. 3.2(C)
SW Logic	Output on	SW Open	SW Open	SW Close
	Output off	SW Close	SW Close	SW Open

4.Alarm Signal Output

※ Alarm signal is sent out through "*P OK*" & "*P OK GND*" and pins on CN3. Please acknowledge an external voltage source is required for this function.

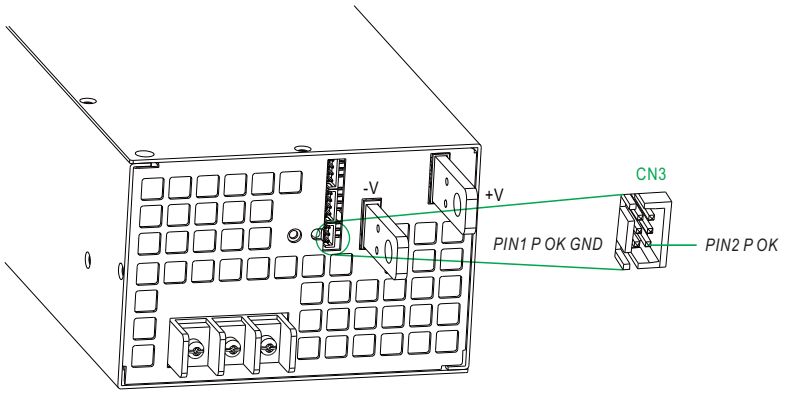

Function	Description	Output of alarm(P OK)
P OK	The signal is "Low" when the power supply is above 65% of the rated output voltage, or say, Power OK	Low (0.5V max at 10mA)
	The signal turns to be "High" when the power supply is under 65% of the rated output voltage, or say, Power Fail	High or open (External applied voltage 10mA max.)

Table 4.1 Explanation of alarm

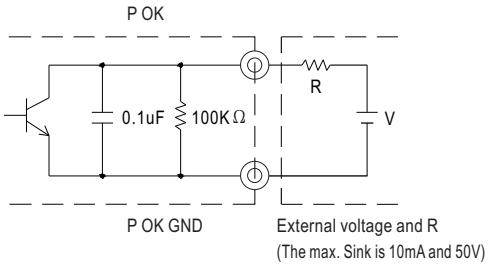

Fig. 4.1 Internal circuit of P OK (Open collector method)

5.Current Sharing with Remote Sense

RSP-1500 has the built-in active current sharing function and can be connected in parallel, up to 4 units, to provide higher output power as exhibited below :

※ The power supplies should be paralleled using short and large diameter wiring and then connected to the load.

※ Difference of output voltages among parallel units should be less than 0.2V.

※ The total output current must not exceed the value determined by the following equation:

Maximum output current at parallel operation=(Rated current per unit)×(Number of unit)×0.9

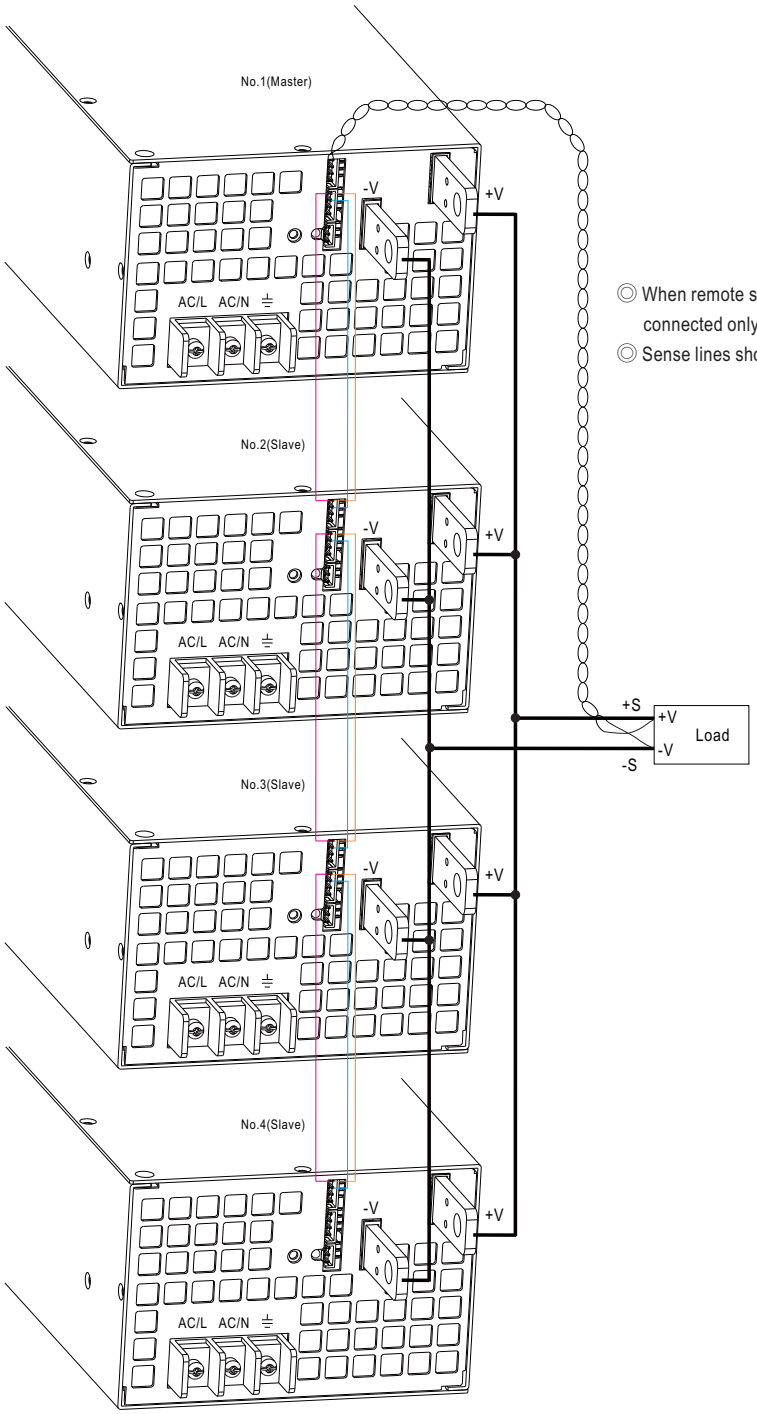

◎ When remote sensing is used in parallel operation, the sensing wire must be connected only to the master unit

◎ Sense lines should be twisted in pairs to minimize noise pick-up.

◎ +S,-S and CS are connected mutually in paralle.

■ Mechanical Specification

Case No.943A Unit:mm

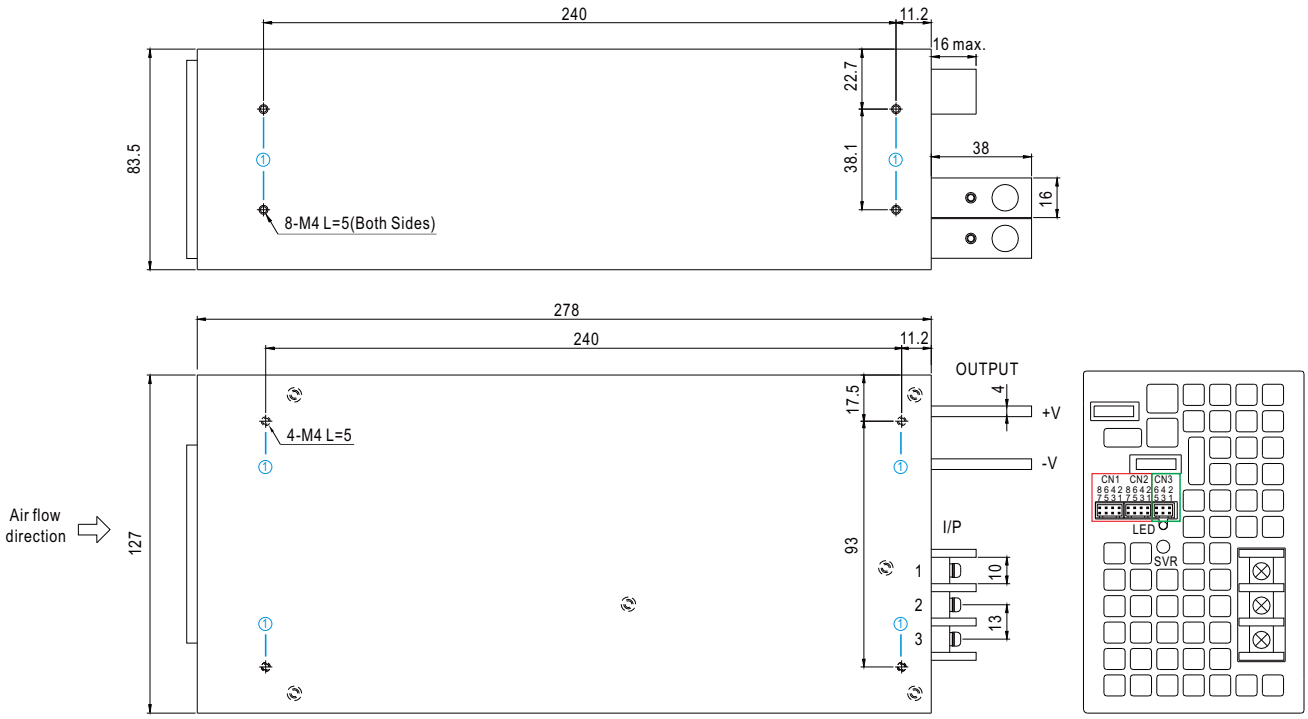

※ Mounting Instruction

Hole No.	Recommended Screw Size	MAX. Penetration Depth L	Recommended mounting torque
①	M4	5mm	7~10Kgf-cm

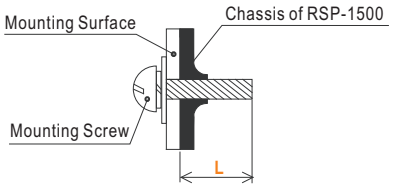

※ Control Pin No. Assignment (CN1,CN2) : HRS DF11-8DP-2DS or equivalent

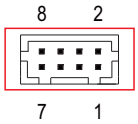

Mating Housing	HRS DF11-8DS or equivalent
Terminal	HRS DF11-**SC or equivalent

◎ CN1 and CN2 are connected internally.

Pin No.	Function	Description
1	RCG	Remote ON-OFF Ground
2	RC2	Remote ON-OFF
3,5,7	-S	Negative sensing for remote sense
4	TRIM	Connection for output voltage programming
6	LS(Current Share)	Current Share
8	+S	Postive sensing for remote sense

※Control Pin No. Assignment (CN3) : HRS DF11-6DP-2DS or equivalent

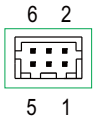

Mating Housing	HRS DF11-6DS or equivalent
Terminal	HRS DF11-**SC or equivalent

Pin No.	Function	Description
1	P OK GND	Power OK Ground
2	P OK	Power OK Signal
3	RCG	Remote ON-OFF Ground
4	AUXG	Auxiliary Ground
5	RC1	Remote ON-OFF
6	AUX	Auxiliary Output

※AC Input Terminal Pin No. Assignment

Pin No.	Assignment	Diagram	Maximum mounting torque
1	FG ⏚	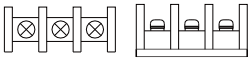	18Kgf-cm
2	AC/N		
3	AC/L		

■ Installation Manual

Please refer to : http://www.meanwell.com/webnet/search/InstallationSearch.html